solo®

(D) *Ersatzteilliste* **Rasenmäher** **Primo 550**
**550 H**
**550 R**
**550 HR**
**550 RS**
**550 HRM**

**Inhaltsverzeichnis**


Seite
2 Gehäuse
4 Hinterradachse
5 Hinterradachse R/RS/HR/SM
6 Vorderradachse
7 Messerantrieb
8 Holm 550/H/R/HR/RS/HRM
9 Bedienteile
13 Ersatzteile
13 Richtlinien für die Bestellung


(GB) *Spare parts list* **Lawnmower**

**Table of contents**


Page
2 Housing
4 Rear wheel axle
5 Rear wheel axle R/RS/HR/SM
6 Front wheel axle
7 Blade drive
8 Handle 550/H/R/HR/RS/HRM
9 Operating parts
13 Spare parts
13 Directions for ordering


(F) *Liste de pièces de rechange* **Tondeuse**

**Table des mattéres**


Page
2 Carter
4 Axe de roue arrière
5 Axe de roue arrière R/RS/HR/SM
6 Suspension de la roue avant
7 Entrainement couteau
8 Guidon 550/H/R/HR/RS/HRM
9 Eléments de function
13 Pièces de rechance
13 Directives pour les comandes


(E) *Lista de piezas de recambio* **Cortacesped**

**Indice**


Página
2 Carter
4 Eje
5 Eje R/RS/HR/SM
6 Delantero eje
7 Accionamiento de cuchillia
8 Larguero 550/H/R/HR/RS/HRM
9 Partes de manejo
13 Piezas de recambio
13 Directivas de pedido



http://www.solo-germany.com
e-mail: info@solo-germany.com

Telefon 07031/301-0
Telefax 07031/301-130
Export 07031/301-149

**Zentral-Ersatzteilservice**
**Telefon 07031/301-209**
**Telefax 07031/301-206**

**SOLO Kleinmotoren GmbH**
Postfach 60 01 52
D-71050 Sindelfingen
Germany



9 550 707 10/02

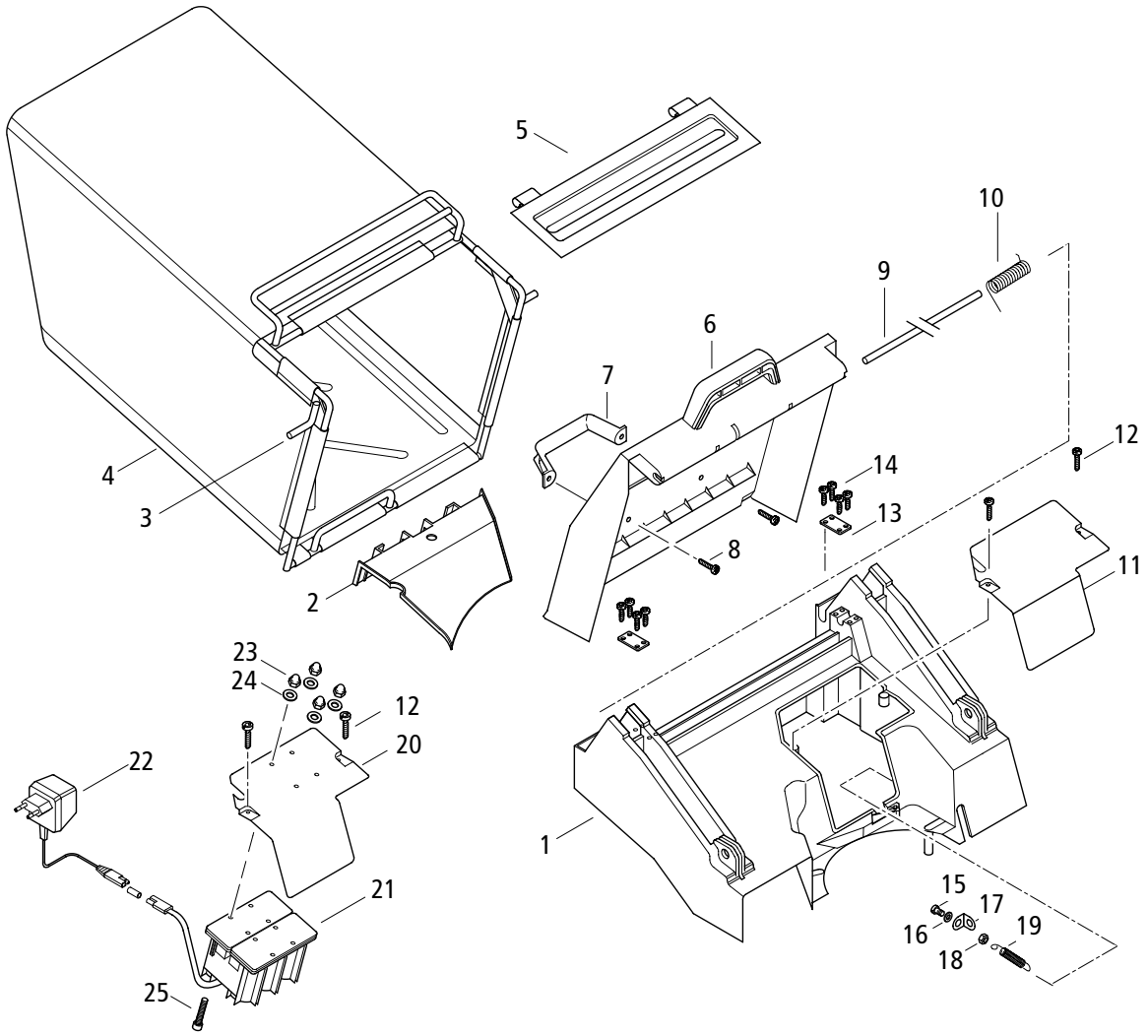


| Bild-Nr.<br>Pos.-No.<br>Pos.-No.<br>Pos.-No. | Bestell-Nr.<br>Order-No.<br>No. de Cde.<br>Ref.-Nr. | Modell<br>Type<br>Modélo<br>Modelo | Menge<br>Quantity<br>Nombres<br>Cantidad | **Gehäuse** | **Housing** | **Carter** | **Carter** |
|---|---|---|---|---|---|---|---|
| 1 | 50 73 618 | | 1 | Rasenmähergehäuse Aufsatz | mower deck top | capôt carter principal | carter cortacesped |
| 2 | 50 73 645 | | 1 | Schaufel | collector | collecteur | colector |
| 3 | 53 00 640 | | 1 | Rahmen | frame | cadre | bastidor |
| 4 | 59 00 772 | | 1 | Grasfangsack | grass catcher | sac à herbe | colector de hierba |
| 5 | 59 00 774 | | 1 | Abdeckung | cover | couvercle | cubierta |
| 6 | 53 00 634 | | 1 | Schutzklappe mit Griff | protection flap with handle | clapet protection avec poignée | tapa de protection con palanca |
| 7 | 50 74 562 | | 1 | Griff | handle | poignée | palanca |
| 8 | 00 18 258 | | 2 | Linsenschraube 5x18 | screw | vis | tornillo |
| 9 | 50 36 403 | | 1 | Achse | axle | axe | eje |
| 10 | 00 73 299 | | 1 | Drehfeder 3x12 | spring | ressort | resorte |
| 11 | 50 73 670 | 550/H/R/HR | 1 | Aufsatzdeckel | top cover | capôt de couvercle | tapa |
| 12 | 00 18 258 | | 2 | Linsenschraube 5x18 | screw | vis | tornillo |
| 13 | 50 42 818 | | 2 | Halteblech | support plate | tôle de support | chapa soporte |
| 14 | 00 18 257 | | 8 | Linsenschraube 5x25 | screw | vis | tornillo |
| 15 | 00 18 346 | | 1 | Zylinderschraube M6x16 | screw | vis | tornillo |
| 16 | 00 30 125 | | 1 | Scheibe 6,4 DIN 9021 | washer | rondelle | arandala |
| 17 | 20 43 411 | | 1 | Befestigungswinkel | support angle | tirant | angulo |
| 18 | 00 28 111 | | 1 | Sechskantmutter M6 DIN 980 | nut | écrou | tuerca |
| 19 | 00 71 213 | | 1 | Zugfeder 1x7x125 | tension spring | ressort de traction | resorte de tension |
| 20 | 50 73 670 | RS | 1 | Abdeckung Batterie | battery cover | couverture batterie | cubierta bateria |
| 21 | 00 84 572 | RS | 1 | Batterie 12V | battery 12V | batterie 12V | bateria 12V |
| 22 | 79 00 297 | RS | 1 | Ladegerät | battery charger | charge batterie | cargadon |
| 23 | 00 24 121 | RS | 4 | Hutmutter M5 | nut | écrou | turerca |
| 24 | 00 30 108 | RS | 4 | Scheibe 5,3 125 B | washer | rondelle | arandela |
| 25 | 00 18 336 | RS | 4 | Zylinderschraube M5x16 | screw | vis | tornillo |

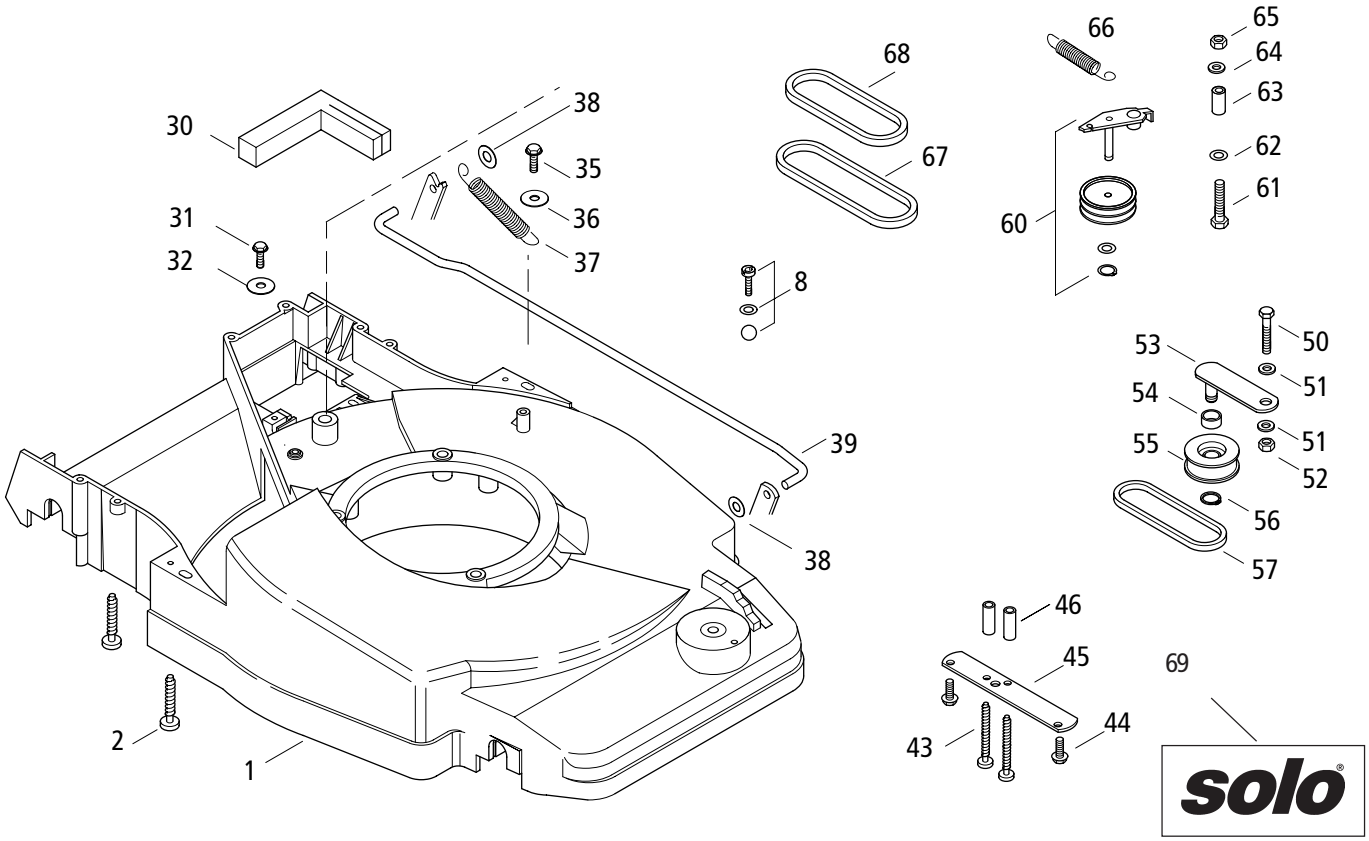


| Bild-Nr.<br>Pos.-No.<br>Pos.-No.<br>Pos.-No. | Bestell-Nr.<br>Order-No.<br>No. de Cde.<br>Ref.-Nr. | Modell<br>Type<br>Modélo<br>Modelo | Menge<br>Quantity<br>Nombres<br>Cantidad | **Gehäuse** | **Housing** | **Carter** | **Carter** |
|---|---|---|---|---|---|---|---|
| 1 | 50 11 714 | | 1 | Rasenmähergehäuse | mower deck | carter principal | carter cortacesped |
| 1 | 50 11 715 | 550/R/<br>HR/RS | 1 | Rasenmähergehäuse | mower deck | carter principal | carter cortacesped |
| 2 | 00 18 276 | | 8 | Linsenschraube 505 | screw | vis | tornillo |
| 8 | 58 00 454 | | 1 | Bowdenzugbefestigung Vario | bowden cable fast. | fixation câble bowden | soporte cable |
| 30 | 50 48 372 | | 1 | Schaumstoffdichtung | foam gasket | joint mousse nylon | junta |
| 31 | 00 18 402 | | 1 | Sechskantschraube 10-2418 | screw | vis | tornillo |
| 32 | 00 30 125 | | 1 | Scheibe 6,4 DIN 9021 | washer | rondelle | arandela |
| 35 | 00 18 183 | | 1 | Sechskantschraube M6x16 | screw | vis | tornillo |
| 36 | 00 30 125 | | 1 | Scheibe 6,4 DIN 9021 | washer | rondelle | arandela |
| 37 | 00 71 227 | | 1 | Zugfeder 2,5x14,5x165 | spring | ressort | resorte |
| 38 | 00 55 244 | | 2 | Sicherungsscheibe 8 DIN 581 | washer | arretage | disco |
| 39 | 50 36 362 | | 1 | Verbindungsstange | connecting rod | tige de liaision | |
| 43 | 00 18 282 | | 2 | Linsenschraube 5x45 | screw | vis | tornillo |
| 44 | 00 18 185 | | 2 | Sechskantschraube M6x20 | screw | vis | tornillo |
| 45 | 50 42 860 | | 1 | Lasche | flap | collier | cubre junta |
| 46 | 00 33 398 | | 2 | Distanzrohr | spacer tube | tube distance | tobu distanciador |
| 50 | 00 12 184 | R | 1 | Sechskantschraube | screw | vis | tornillo |
| 51 | 00 72 145 | R | 1 | Scheibe | washer | rondelle | arandela |
| 52 | 00 28 116 | R | 1 | Sechskantmutter | nut | écrou | tuerca |
| 53 | 53 00678 | R | 1 | Spannhebel | tension lever | levier tension | palanca tensora |
| 54 | 00 33 245 25 | R | 1 | Distanzring | spacer | entretoise | pieza distanciadora |
| 55 | 53 00 585 | R | 1 | Spannrolle | tension pulley | boulie de tension | rodillo tensora |
| 56 | 00 55 102 | R | 1 | Sicherungsring | circlip | circlipc | antilo de seguridad |
| 57 | 00 57 206 | R | 1 | Keilriemen 8x5x775 Li. | v-belt | courroie | correa |
| 60 | 58 00 452 | R | 1 | Lagerbügel komplett | bracket compl. | étrier | soporte compl. |
| 61 | 00 12 279 | | 1 | Sechskantschraube M8x60 DIN 931 | screw | vis | tornillo |
| 62 | 00 72 176 | | 1 | Scheibe 8,2x20x1 DIN 2093 | washer | rondelle | arandela |
| 63 | 00 33 392 | | 1 | Distanzrohr 12x1,8x26,2 | spacer tube | douille | tubo espaciador |
| 64 | 00 31 617 | | 1 | Anlaufscheibe 8,4x20x1,5 | washer | rondelle | arandela |
| 65 | 00 28 116 | | 1 | Sechskantmutter M8 | nut | écrou | tuerca |
| 66 | 00 71 235 | | 1 | Zugfeder 1,6x10x55 | tension spring | ressort | resorte tension |
| 67 | 00 57 221 | | 1 | Keilriemen x10-547 LD | v-belt | courroie | correa |
| 68 | 00 57 220 | | 1 | Keilriemen x10-422 LD | v-belt | courroie | correa |
| 69 | 58 00 458 | | 1 | Klebeschilder-Set | sticker-set | autocollants | juego de |

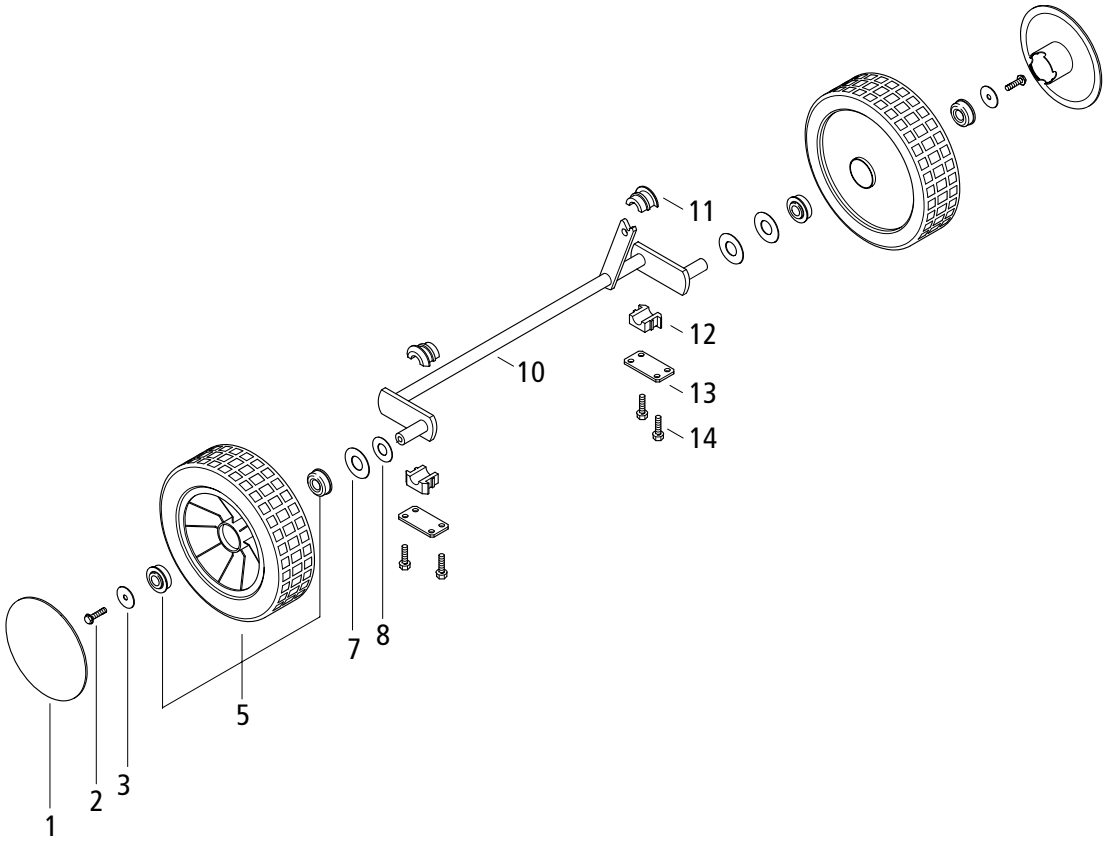


| Bild-Nr.<br>Pos.-No.<br>Pos.-No.<br>Pos.-No. | Bestell-Nr.<br>Order-No.<br>No. de Cde.<br>Ref.-Nr. | Modell<br>Type<br>Modélo<br>Modelo | Menge<br>Quantity<br>Nombres<br>Cantidad | **Hinterradachse** | **Rear wheel axle** | **Axe de roue arrière** | **Eje** |
|---|---|---|---|---|---|---|---|
| 1 | 50 74 102 | | 2 | Radkappe Ø 135 mm | wheel cover | chapeau de roue | tapa de rueda |
| 2 | 00 18 193 | | 4 | Sechskantschraube M5x12 | screw | vis | tornillo |
| 3 | 00 31 540 | | 4 | Druckscheibe 5,5x27x1 | pressure washer | rondelle de pression | arandela de presion |
| 5 | 53 00 632 | | 2 | Rad Ø 200 mm | wheel | roue | rueda |
| 7 | 00 31 210 | | 2 | Scheibe 12x18x1,2 DIN 988 | washer | rondelle | arandela |
| 8 | 00 72 155 | | 2 | Tellerfeder 12,5x25x0,7 | spring | ressort plat | resorte de disco |
| 10 | 53 00 625 | | 1 | Hinterradlagerung | rear wheel bearing | support roue arriere | apoyo |
| 11 | 50 74 176 | | 2 | Lagerschale 10,2 | bearing cup | coussinet superieur | cojinete, parte sup. |
| 12 | 50 74 175 | | 2 | Lagerschale 10,2 | bearing cup | coussinet inferieur | cojinete bajo |
| 13 | 50 42 824 | | 2 | Achslagerblech | axle support plate | couvercie d'axe | chapa soporte eje |
| 14 | 00 18 185 | | 2 | Sechskantschraube M6x20 | screw | vis | tornillo |

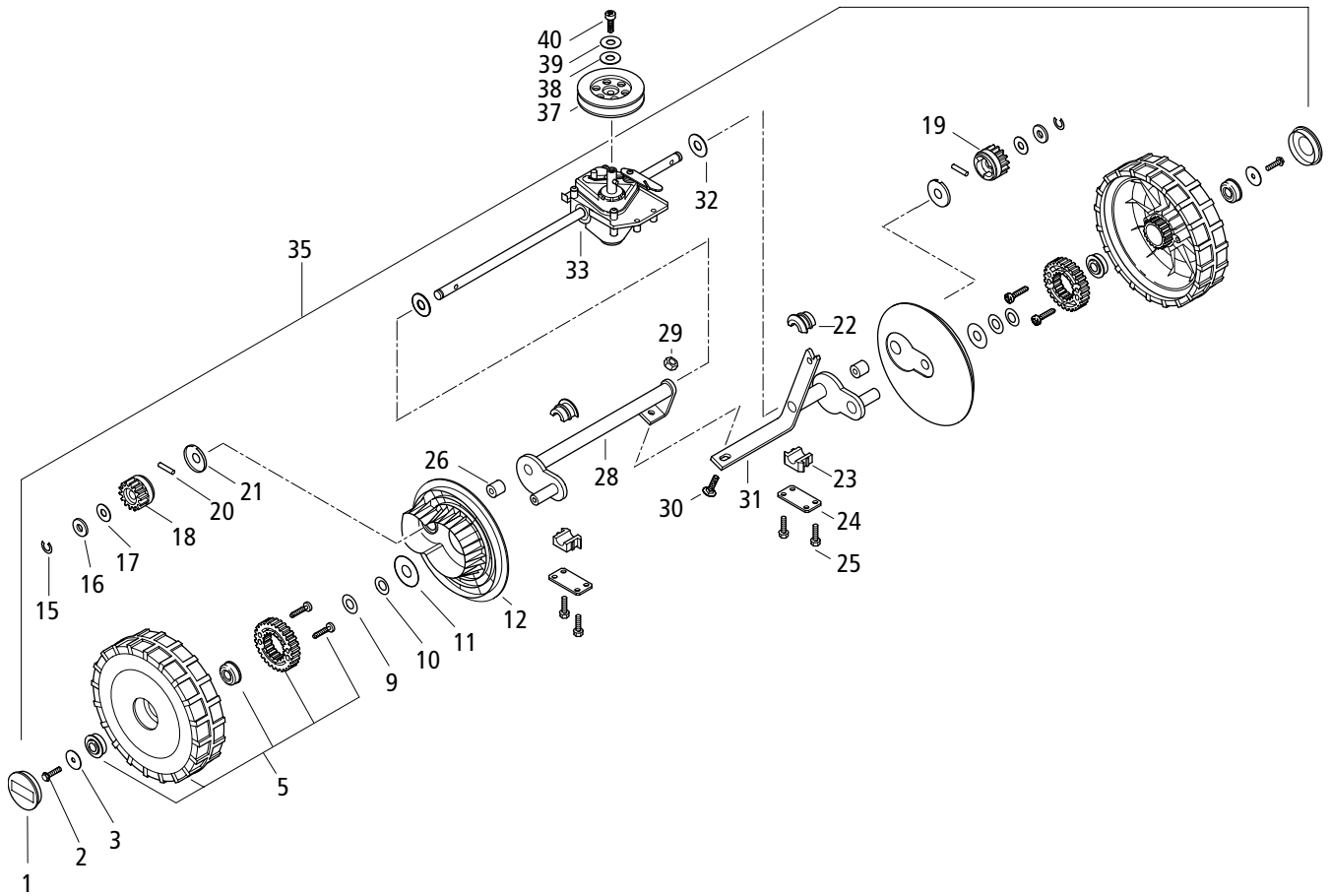


| Bild-Nr.<br>Pos.-No.<br>Pos.-No.<br>Pos.-No. | Bestell-Nr.<br>Order-No.<br>No. de Cde.<br>Ref.-Nr. | Modell<br>Type<br>Modélo<br>Modelo | Menge<br>Quantity<br>Nombres<br>Cantidad | **Hinterradachse R / RS / HR** | **Rear wheel axle** | **Axe de roue arrière** | **Eje** |
|---|---|---|---|---|---|---|---|
| 1 | 50 74 157 | | 2 | Radkappe | wheel cover | chapeau de roue | tapa de rueda |
| 2 | 00 18 193 | | 2 | Sechskantschraube M5x12 | screw | vis | tornillo |
| 3 | 00 31 540 | | 2 | Druckscheibe 5,5x27x1 | pressure washer | rondelle de pression | arandela |
| 5 | 53 00 674 | | 2 | Rad, Ø 200 mm | wheel | roue | rueda |
| 9 | 00 31 210 | | 2 | Scheibe 12x18x1,2 DIN 988 | washer | rondelle | arandela |
| 10 | 00 72 155 | | 2 | Tellerfeder 12,5x25x0,7 | spring washer | ressort plat | resorte |
| 11 | 00 31 552 | | 2 | Anlaufscheibe 12,2x35x0,5 | friction washer | rondelle | arandela |
| 12 | 50 73 631 | | 2 | Abdeckung | cover | couvercle | cubierta |
| 15 | 00 55 134 | | 2 | Sicherungsscheibe 9 DIN 6799 | circlip | circlip | arandela |
| 16 | 00 31 618 | | 2 | Anlaufscheibe 12,2x30x1 | fricton washer | rondelle | arandela |
| 17 | 00 61 336 | | 2 | Filzring 22,5x27x3,5 | felt ring | bague feutre roue | anillo de fieltro |
| 18 | 50 38 438 | | 1 | Zahnrad, 14 Zähne, Mod. 2,5 | toothed wheel with | dentée avec axe libre | rueda dentada |
| 19 | 50 38 437 | | 1 | Zahnrad, 14 Zähne, Mod. 2,5 | toothed wheel with | dentée avec axe libre | rueda dentada |
| 20 | 00 40 196 | | 2 | Stift | pin | goupille | peruo |
| 21 | 50 45 702 | | 2 | Topf | box | pot | pote |
| 22 | 50 74 124 | | 2 | Lagerschale, 18,2 Oberteil | bearing cup, upper part | demi coque arbre | cascara |
| 23 | 50 74 125 | | 2 | Lagerschale, 18,2 Unterteil | bearing cup, lower part | demi coque arbre | cascara |
| 24 | 50 42 824 | | 4 | Achslagerblech | axle support plate | couverde d'axe | chapa soporte eje |
| 25 | 00 18 185 | | 4 | Sechskantschraube M6x20 | screw | vis | tornillo |
| 26 | 00 53 213 | | 4 | Gleitlager 12x14x15 | slide bearing | coussinet | cojinete de fricion |
| 28 | 53 00 668 | | 1 | Hinterradlagerung | rear wheel support | support roue arrièe | soporte rueda |
| 29 | 00 28 107 | | 1 | Sechskantmutter M8 DIN 980 | nut | ecrou | tuerca |
| 30 | 00 17 103 | | 1 | Sechskantschr. M8x20 DIN 933 | screw | vis | tornillo |
| 31 | 53 00 669 | | 1 | Hinterradlagerung, links | rear wheel support | support roue arrièe roue | soporte rueda |
| 32 | 00 31 537 | | 2 | Anlaufscheibe 12,2x26x1 | friction washer | rondelle | arandela |
| 33 | 30 00 227 | | 1 | Getriebe | gear | engrenage | engranaje |
| 35 | 53 00 683 | | 1 | Hinterradachse, kompl. | rear wheel axie, compl. | axe de roue arrièe, compl. | eje, compl. |
| 37 | 50 74 130 | 550/R | 1 | Keilriemenscheibe | v-belt pulley | poulie à courroie | polea para correa |
| 37 | 50 74 131 | RS/HR/HR-M | 1 | Keilriemenscheibe | v-belt pulley | poulie à courroie | polea para correa |
| 38 | 00 72 143 | | 1 | Sicherungsscheibe | tension washer | rondelle de tension | arandela |
| 39 | 00 72 102 | | 1 | Sicherungsscheibe | tension washer | rondelle de tension | arandela |
| 40 | 00 18 344 | | 1 | Zylinderschraube M6x12 | screw | vis | tornillo |

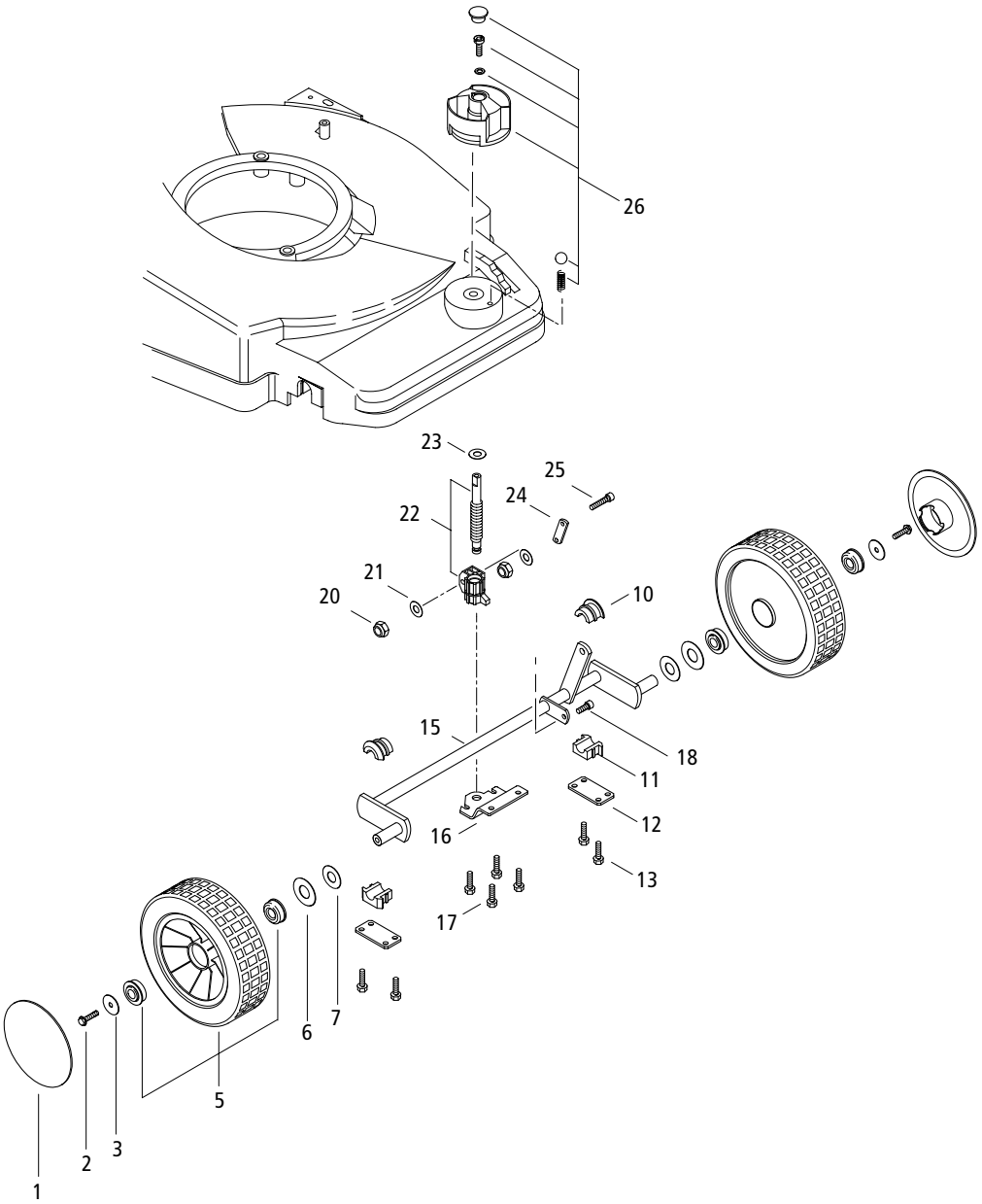


| Bild-Nr.<br>Pos.-No.<br>Pos.-No.<br>Pos.-No. | Bestell-Nr.<br>Order-No.<br>No. de Cde.<br>Ref.-Nr. | Modell<br>Type<br>Modélo<br>Modelo | Menge<br>Quantity<br>Nombres<br>Cantidad | **Vorderradachse** | **Front wheel axle** | **Suspension de la roue avant** | **Delantero eje** |
|---|---|---|---|---|---|---|---|
| 1 | 50 74 104 | | 2 | Radkappe, Ø 115 mm, rot | wheel cover, red | chapeau de roue, rouge | tapa de rueda, rojo |
| 2 | 00 18 193 | | 4 | Sechskantschraube M5x12 | screw | vis | tornillo |
| 3 | 00 31 540 | | 4 | Druckscheibe 5,5x27x1 | pressure washer | rondelle de pression | arandela |
| 5 | 53 00 613 | | 2 | Rad, Ø 180 mm | wheel | roue | rueda |
| 6 | 00 31 210 | | 2 | Scheibe 12x18x1,2 DIN 988 | washer | rondelle | arandela |
| 7 | 00 72 155 | | 2 | Tellerfeder 12,5x25x0,7 DIN 2093 | spring | ressort plat | resorte |
| 10 | 50 74 176 | | 2 | Lagerschale 14,1, Oberteil | bearing cup, upper | coussinet superieur | cojinete |
| 11 | 50 74 175 | | 4 | Lagerschale 14,1, Unterteil | bearing cup, lower | coussinet inwieur | cojinete |
| 12 | 50 42 824 | | 2 | Achslagerblech | axle support plate | couverde d'axe | chapa soporte eje |
| 13 | 00 18 185 | | 4 | Sechskantschraube M6x20 | screw | vis | tornillo |
| 15 | 53 00 624 | | 1 | Vorderradlagerung | front wheel support | support roue devant | soporte rueda |
| 16 | 50 43 356 | | 1 | Führungsblech | guide plate | töle guidage | chapa guia |
| 17 | 00 18 185 | | 4 | Sechskantschraube M6x20 | screw | vis | tornillo |
| 18 | 00 11 310 | | 1 | Zylinderschraube M6x16 | screw | vis | tornillo |
| 20 | 00 20 122 | | 1 | Sechskantmutter M6 EN 27040 | lock nut | ächrou | tuerca |
| 21 | 00 30 100 | | 1 | Scheibe 6,4 DIN 125 B | washer | rondelle | arandela |
| 22 | 58 00 276 | | 1 | Gewindespindel T14x2 | threaded spindle | broche filete | husillo roscado |
| 23 | 00 31 497 | | 1 | Anlaufscheibe 10,2x30x1,5 | washer | rondelle | arandela |
| 24 | 50 42 830 | | 1 | Lasche | flap | collier | cubrejunta |
| 25 | 00 10 583 | | 1 | Zylinderschraube M6x30 DIN 6912 | screw | vis | tornillo |
| 26 | 58 00 455 | | 1 | Verstellknopfbefestigung | adjustment knob | fixation bouton | d'ajustage soporte |

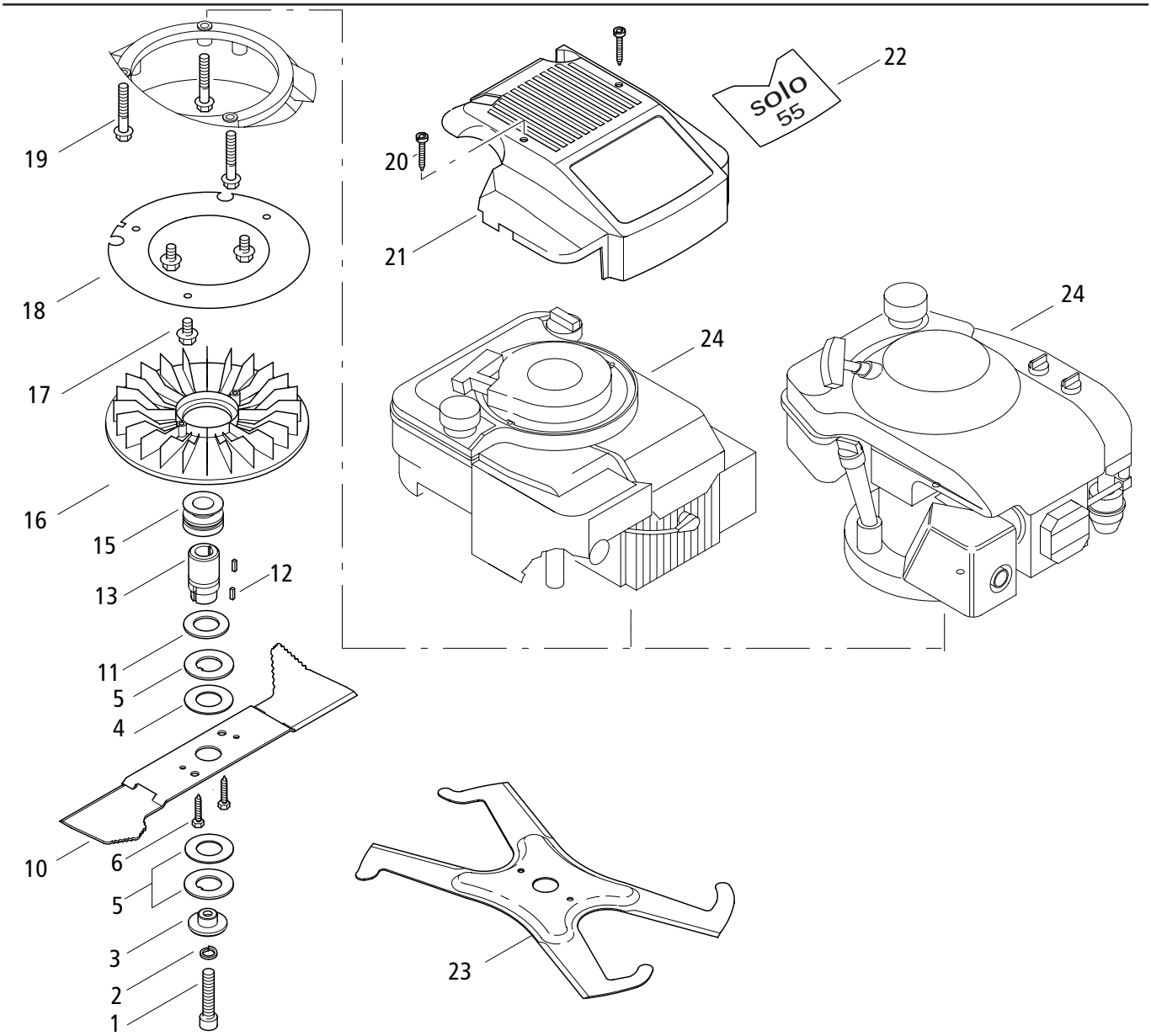


| Bild-Nr.<br>Pos.-No.<br>Pos.-No.<br>Pos.-No. | Bestell-Nr.<br>Order-No.<br>No. de Cde.<br>Ref.-Nr. | Modell<br>Type<br>Modélo<br>Modelo | Menge<br>Quantity<br>Nombres<br>Cantidad | **Messerantrieb** | **Blade drive** | **Entrainement couteau** | **Accionamiento de cuchilla** |
|---|---|---|---|---|---|---|---|
| 1 | 00 10 544 | | 1 | Zylinderschraube 318" 24UNFAO | screw | vis | tornillo |
| 2 | 00 34 177 | | 1 | Federring 10 DIN 7980 | spring ring | rondelle belville | anillo |
| 3 | 50 31 223 | | 1 | Druckstück | thrust washer | pike de pression | arandela |
| 4 | 00 31 293 | | 2 | Druckscheibe | washer | rondelle | arandela |
| 5 | 00 31 295 | | 2 | Reibscheibe | washer | rondelle | arandela |
| 6 | 00 12 375 | | 2 | Sechskantschraube 6,302 DIN 7976 | screw | vis | tornillo |
| 10 | 50 43 995 | | 1 | Propellermesser 480x70x3 | cutting blade | lame de coupe | cuchilla |
| 11 | 00 72 158 | | 1 | Tellerfeder 32,5x56x3 | spring | rondelle plat | resorte |
| 12 | 00 75 123 | | 2 | Scheibenfeder 46,5 DIN 6888 | disc spring | clavette demi-lune | resorte |
| 13 | 53 005 31 | | 1 | Rohrnabe 22,25x36x61,5 | tube hub | moyeu | cubo |
| 15 | 50 74 910 | 550/R | 1 | Keilriemenscheibe | V-belt pulley | poulie ä courroie | polea para correa |
| 15 | 50 74 911 | RS/HR | 1 | Keilriemenscheibe | V-belt pulley | poulie ä courroie | polea para correa |
| 16 | 50 73 577 | | 1 | Gebläserad | fan wheel | turbine | turbina |
| 17 | 00 18 305 | | 3 | Sechskantschraube M8x16 | screw | vis | tornillo |
| 18 | 50 42 828 | | 1 | Abdeckblech | cover plate | töle de couverture | chapa cubierta |
| 19 | 00 18 283 | 550/R/RS | 3 | Sechskantschraube 3/8"x2" | screw | vis | tomillo |
| 20 | 00 18 376 | 550/R/RS | 2 | Linsenschraube 4 x30 mm | screw | vis | tornillo |
| 21 | 50 73 673 | 550/R/RS | 1 | Motorhaube | engine cover | capöt moteur | cubierta de motor |
| 22 | 00 69 218 | 550/R/RS | 1 | Selbstklebeschild Motorhaube | Decal | Autocollant Solo | Adhesivo |
| 23 | 50 43 961 | | 1 | Mulchmesser | mulching blade | couteau mulching | cuchilla |
| 24 | 20 00 401 | 550/R | 1 | B & 5 Motor 190 ccm | B & S engine | moteur B & S | motor B & S |
| 24 | 20 00 425 | RS | 1 | B & 5 Motor 190 ccm | B & S engine | moteur B & S | motor B & S |
| 24 | 20 00 497 | 550/H/HR | 1 | HONDA Motor GCV, 160 ccm | HONDA engine | moteur HONDA | motor HONDA |

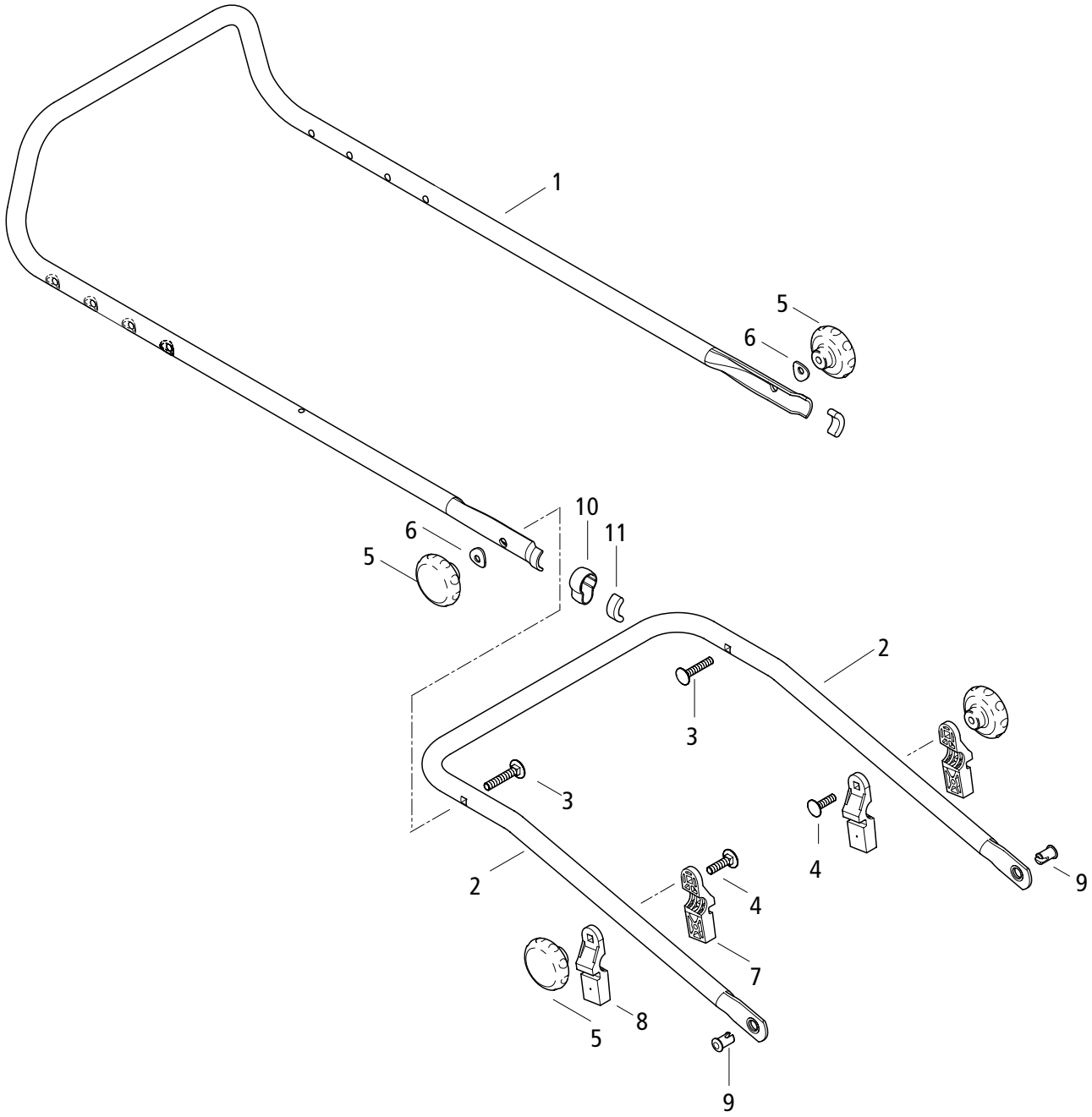


| Bild-Nr.<br>Pos.-No.<br>Pos.-No.<br>Pos.-No. | Bestell-Nr.<br>Order-No.<br>No. de Cde.<br>Ref.-Nr. | Modell<br>Type<br>Modélo<br>Modelo | Menge<br>Quantity<br>Nombres<br>Cantidad | **Holm**<br>**550 / H / R / HR / RS / HRM** | **Handle** | **Guidon** | **Larguero** |
|---|---|---|---|---|---|---|---|
| 1 | 50 35 965 | | 1 | Holm- Oberteil | handle bar | guidon superieur | larguero |
| 2 | 53 00 639 | | 2 | Holm- Unterteil | lower handle bar | longeron | larguero |
| 3 | 00 17 110 | | 2 | Flachrundschraube M8x45 | flat screw | vis | tornillo |
| 4 | 00 17 113 | | 2 | Flachrundschraube M8x30 | flat screw | vis | tornillo |
| 5 | 00 94 293 | | 4 | Sterngriff M8 | handle | étrier | mango |
| 6 | 00 30 164 | | 2 | 1 Scheibe 8,4x25x2 | washer | rondelle | arandela |
| 7 | 50 74 860 | | 2 | Klemmstück rechts | clip | collier | grapa |
| 8 | 50 74 861 | | 2 | Klemmstück links | clip | collier | grapa |
| 9 | 50 74 976 | | 2 | Lagerbolzen 12x23,5 | bolt | goujon | pasador |
| 10 | 50 74 100 | | 1 | Bowdenzughalter | bowden cable clamp | collier de serrage | soporte cable wden |
| 11 | 50 74 246 | | 2 | Schutzkappe | protection cap | capuchon de protect. | caperuza protect. |

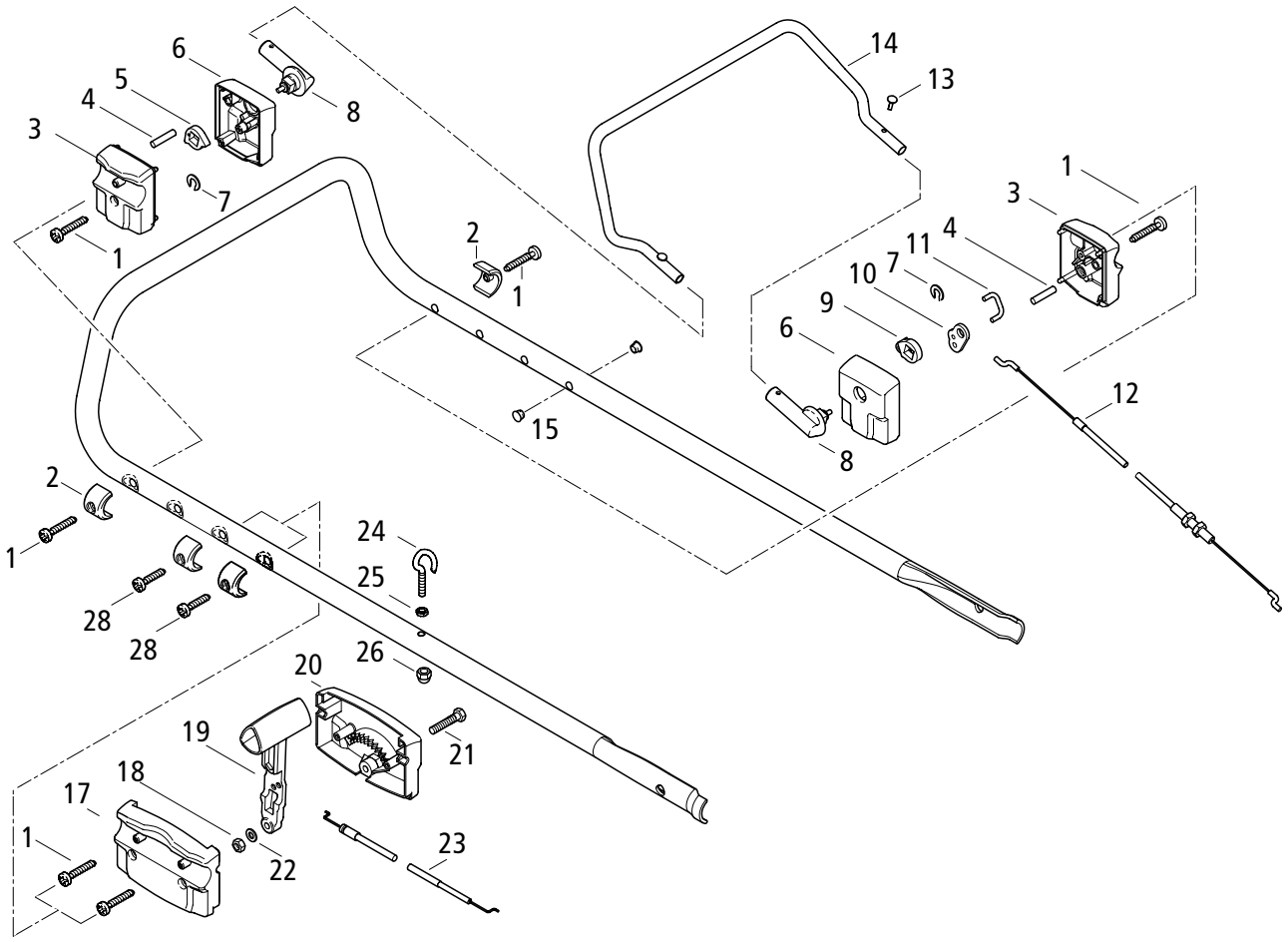


| Bild-Nr.<br>Pos.-No.<br>Pos.-No.<br>Pos.-No. | Bestell-Nr.<br>Order-No.<br>No. de Cde.<br>Ref.-Nr. | Modell<br>Type<br>Modélo<br>Modelo | Menge<br>Quantity<br>Nombres<br>Cantidad | **Bedienteile**<br>**550 / R / HR / RS** | **Operating parts** | **Eléments de function** | **Partes de manejo** |
|---|---|---|---|---|---|---|---|
| 1 | 00 18 358 | | 5 | PT-Schraube-4x35 kt | screw | vis | tornillo |
| 2 | 50 74 110 | | 4 | Halbschelle | clamp | collier | ambrazadera |
| 3 | 50 74 958 | | 2 | Schaltgehäuse Außen | swtich housing | boîtier commande | carter |
| 4 | 00 40 197 | | 2 | Zylinderstift 6m6x28 DIN 7 | pin | goujon | perno |
| 5 | 50 74 127 | | 1 | Klemmstück | clamping piece | serre-joint | abrazadera |
| 6 | 50 74 959 | | 2 | Schaltgehäuse Innen | swtich housing | boîtier commande | carter |
| 7 | 00 55 104 | | 2 | Sicherungsscheibe | circlip | rondelle | seguro |
| 8 | 58 00 491 | | 2 | Bügel-Aufnahme | support | support | soporte |
| 9 | 50 74 126 | | 1 | Schalthebel | switch lever | levier de commande | palanca |
| 10 | 50 74 122 | | 1 | Schalthebel 2 | switch lever | levier de commande | palanca |
| 11 | 50 36 406 | | 1 | Verbindungsstange | connecting rod | tige de connection | barra de conexion |
| 12 | 38 00 351 | | 1 | Bowdenzug Bremse | bowden cable | câble bowden | cable bowden |
| 13 | 00 44 286 | | 2 | Abdeckklammer | clamp | collier | ambrazadera |
| 14 | 50 35 111 | | 1 | Schaltbügel Motorbremse | switch loop | étrier | estribo |
| 15 | 50 74 440 | | 2 | Stopfen | plastic plug | bouchon en plastique | tapon plastico |
| 17 | 50 74 956 | | 1 | Gehäuse Außen | switch housing | carter commande | carter |
| 18 | 00 20 122 | | 1 | Sechskantm. selbsts. DIN 935-gelb | hex. nut | écrou | tuerca |
| 19 | 50 74 950 | | 1 | Gashebel | lever | levier | palanca |
| 20 | 58 00 478 | | 1 | Schaltgehäuse Innen, bedruckt Choke | switch housing | carter commande | carter |
| 21 | 00 12 171 | | 1 | Sechskantschraube M6x30 DIN 931 | screw | vis | tornillo |
| 22 | 00 72 111 | | 1 | Scheibe 6,2x1 2x0,6-DIN 2093 TE | washer | rondelle | arandela |
| 23 | 38 00 353 | 550 | 1 | Bowdenzug- Gas | bowden cable | câble bowden | cable bowden |
| 23 | 38 00 358 | R / RS | 1 | Bowdenzug- Gas | bowden cable | câble bowden | cable bowden |
| 23 | 38 00 355 | HR / RA | 1 | Bowdenzug- Gas | bowden cable | câble bowden | cable bowden |
| 24 | 50 31 980 | | 1 | Spezialschraube | screw | vis | tornillo |
| 25 | 00 20 116 | | 1 | Sechskantmutter M6 DIN 439B gelb | hex. nut | écrou | tuerca |
| 26 | 00 24 110 | | 1 | Hutmutter M6 DIN 1587 | box nut | écrou à calotte | tuerca |
| 28 | 00 18 376 | | 2 | PT-Schraube-4x30 kt | screw | vis | tornillo |

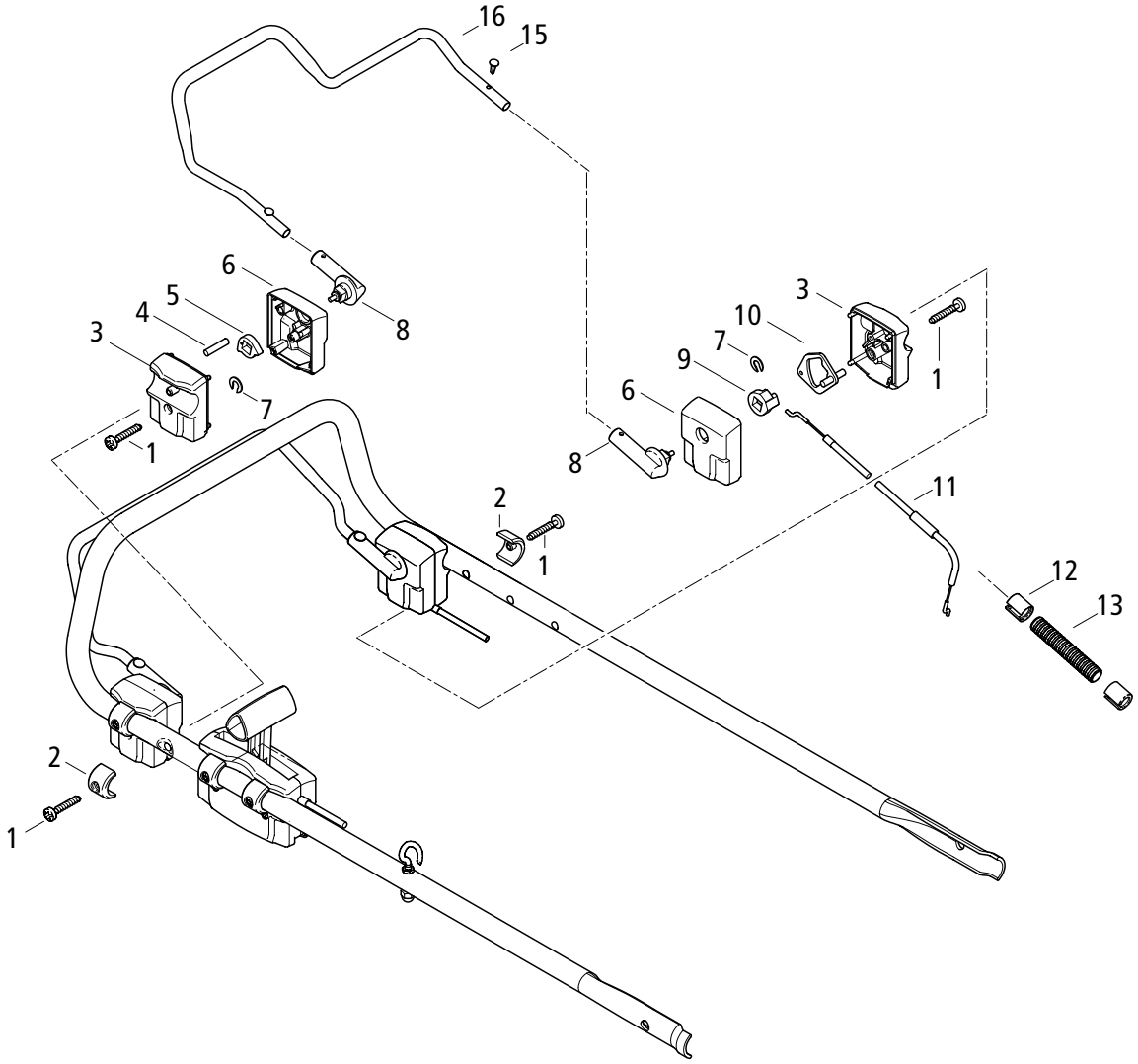


| Bild-Nr.<br>Pos.-No.<br>Pos.-No.<br>Pos.-No. | Bestell-Nr.<br>Order-No.<br>No. de Cde.<br>Ref.-Nr. | Modell<br>Type<br>Modélo<br>Modelo | Menge<br>Quantity<br>Nombres<br>Cantidad | **Bedienteile<br>R / HR / RS** | **Operating parts** | **Eléments de function** | **Partes de manejo** |
|---|---|---|---|---|---|---|---|
| 1 | 00 18 358 | | 4 | PT-Schraube-4x35 kt | screw | vis | tornillo |
| 2 | 50 74 110 | | 2 | Halbschelle | clamp | collier | ambrazadera |
| 3 | 50 74 958 | | 2 | Schaltgehäuse Außen | swtich housing | boîtier commande | carter |
| 4 | 00 40 197 | | 1 | Zylinderstift 6m6x28 DIN 7 | pin | goujon | perno |
| 5 | 50 74 127 | | 1 | Klemmstück | clamping piece | serre-joint | abrazadera |
| 6 | 50 74 959 | | 2 | Schaltgehäuse Innen | swtich housing | boîtier commande | carter |
| 7 | 00 55 104 | | 2 | Sicherungsscheibe | circlip | rondelle | seguro |
| 8 | 58 00 491 | | 2 | Bügel-Aufnahme | support | support | soporte |
| 9 | 50 16 100 | | 1 | Schaltnocken | switch lever | levier de commande | palanca |
| 10 | 58 00 487 | | 1 | Schalthebel | switch lever | levier de commande | palanca |
| 11 | 38 00 362 | | 1 | Bowdenzug Fahrantrieb | bowden cable | câble bowden | cable bowden |
| 12 | 50 74 204 | | 2 | Endhülse | sleeve | doille | casquillo |
| 13 | 00 64 427 | | 1 | Wellschlauch d 12 mm | hose | gaine | tubo |
| 15 | 00 44 286 | | 2 | Abdeckklammer | clamp | collier | ambrazadera |
| 16 | 50 35 112 | | 1 | Schaltbügel, Fahrantrieb | switch lop | étrier de commande | estribo |

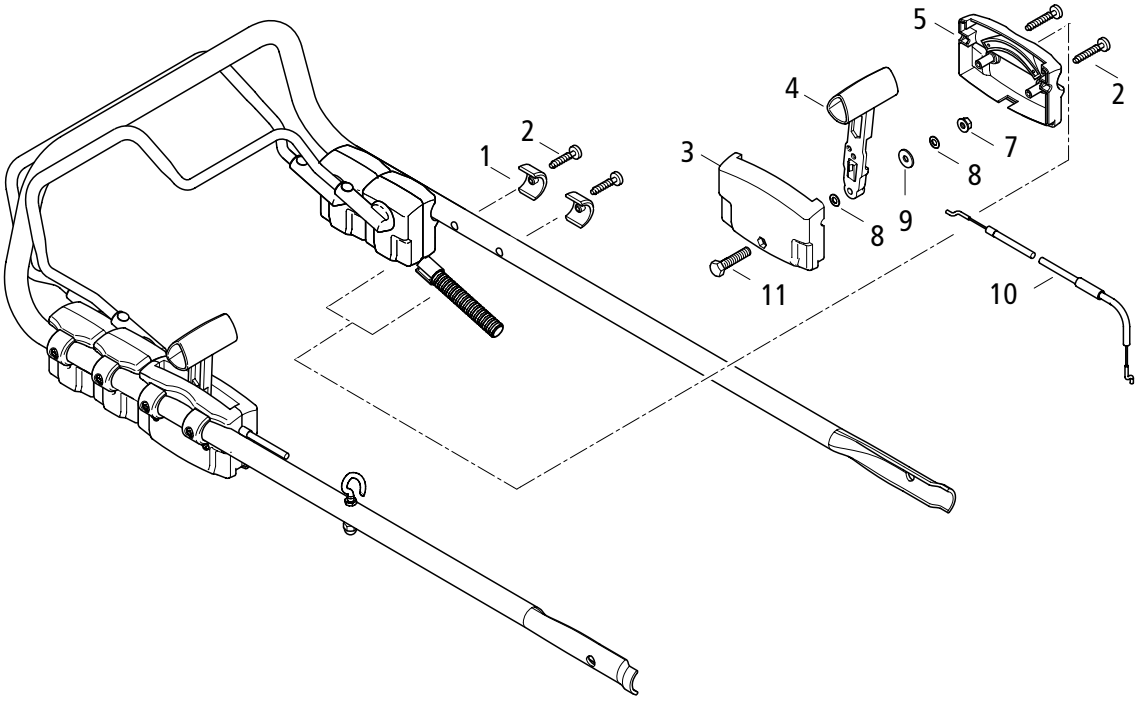


| Bild-Nr.<br>Pos.-No.<br>Pos.-No.<br>Pos.-No. | Bestell-Nr.<br>Order-No.<br>No. de Cde.<br>Ref.-Nr. | Modell<br>Type<br>Modélo<br>Modelo | Menge<br>Quantity<br>Nombres<br>Cantidad | **Bedienteile**<br>**HR / RS / SM** | **Operating parts** | **Eléments de function** | **Partes de manejo** |
|---|---|---|---|---|---|---|---|
| 1 | 50 74 110 | | 2 | Halbschelle | clamp | collier | ambrazadera |
| 2 | 00 18 358 | | 4 | PT-Schraube-4x35 kt | screw | vis | tornilio |
| 3 | 58 00 479 | | 1 | Schaltgehäuse Innen, bedruckt | swtich housing | boîtier commande | carter |
| 4 | 58 00 488 | | 1 | Hebel mit Buchse | lever | levier | palanca |
| 5 | 50 74 956 | | 1 | Gehäuse Außen | swtich housing | boîtier commande | carter |
| 7 | 00 28 119 | | 1 | Sechskantmutter M6 DIN 980 | hex. nut | écrou | tuerca |
| 8 | 00 72 111 | | 2 | Scheibe 6,2x12x0,6-DIN 2093 TE | washer | rondelle | arandella |
| 9 | 00 30 125 | | 1 | Scheibe 6,4 DIN 9021 ST ZN Gelb | washer | rondelle | arandella |
| 10 | 38 00 360 | | 1 | Bowdenzug Vario | bowden cable | câble bowden | cable bowden |
| 11 | 00 12 125 | | 1 | Sechskantschr. M6x35 DIN 931-8.8 | screw | vis | tornilio |

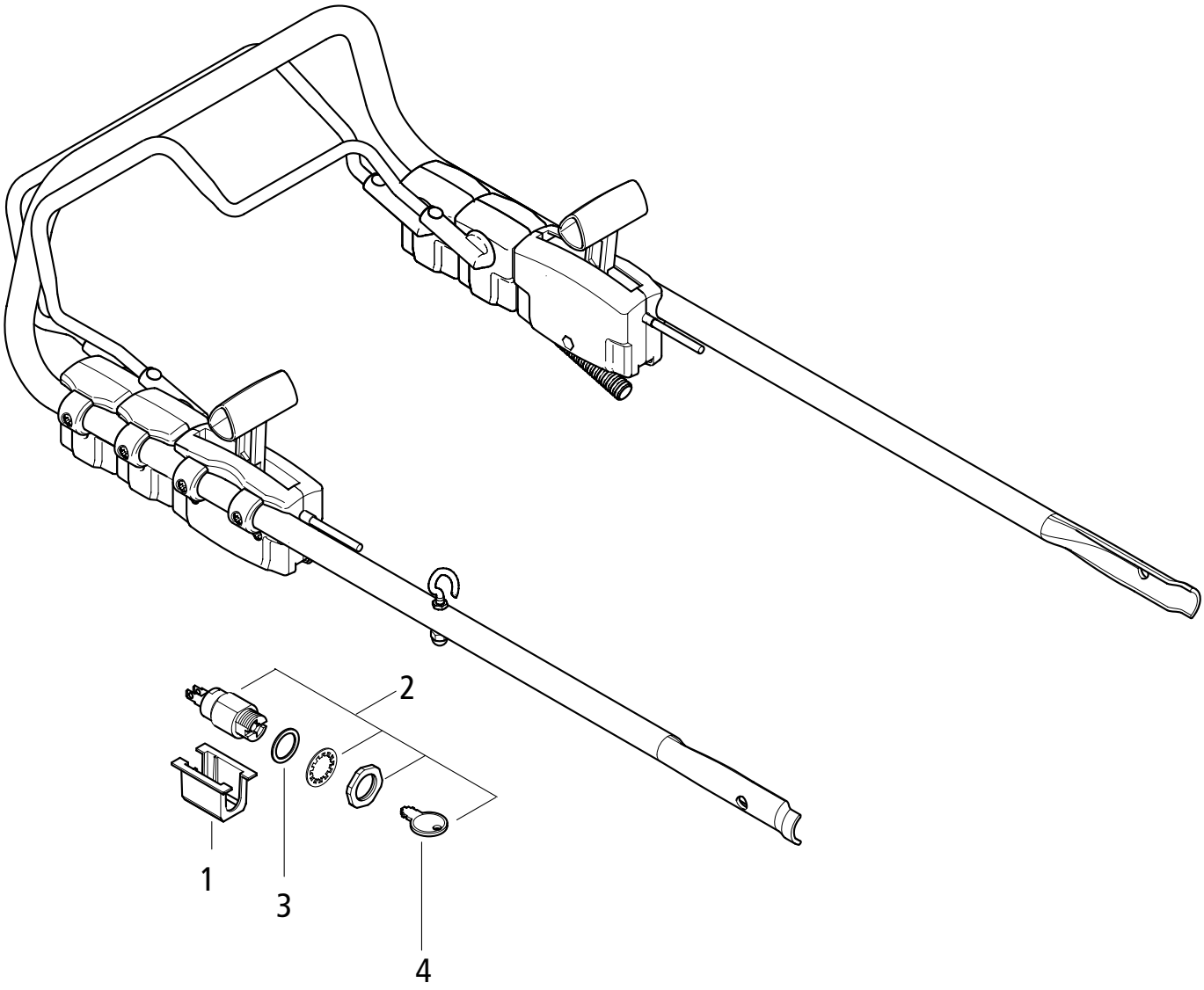


| Bild-Nr.<br>Pos.-No.<br>Pos.-No.<br>Pos.-No. | Bestell-Nr.<br>Order-No.<br>No. de Cde.<br>Ref.-Nr. | Modell<br>Type<br>Modélo<br>Modelo | Menge<br>Quantity<br>Nombres<br>Cantidad | **Bedienteile RS / SM** | **Operating parts** | **Eléments de function** | **Partes de manejo** |
|---|---|---|---|---|---|---|---|
| 1 | 50 74 529 | RS / SM | 1 | Zündschloßhalter | ignition lock support | support antivol | soporte |
| 2 | 79 00 296 | RS / SM | 1 | Zündschloß | ignition lock | antivol | candado |
| 3 | 00 31 518 | RS / SM | 2 | Scheibe 16x22x1 DIN 988 | washer | rondelle | arandela |
| 4 | 6 91 959 | RS / SM | 1 | Zündschlüssel | Key | Clé | Llave |

| Bestell-Nr. Order-No. No. de Cde. Ref.-Nr. | Modell Type Modélo Modelo | Seite Page Page Pagina |
|---|---|---|
| 00 10 544 | 1 | 7 |
| 00 10 583 | 1 | 6 |
| 00 11 310 | 1 | 6 |
| 00 12 125 | 1 | 11 |
| 00 12 171 | 1 | 9 |
| 00 12 184 | 1 | 3 |
| 00 12 279 | 1 | 3 |
| 00 12 375 | 2 | 7 |
| 00 17 103 | 1 | 5 |
| 00 17 110 | 2 | 8 |
| 00 17 113 | 2 | 8 |
| 00 18 183 | 1 | 3 |
| 00 18 185 | 2 | 3 |
| 00 18 185 | 2 | 4 |
| 00 18 185 | 4 | 5 |
| 00 18 185 | 8 | 6 |
| 00 18 185 | 4 | 6 |
| 00 18 193 | 4 | 4 |
| 00 18 193 | 2 | 5 |
| 00 18 193 | 4 | 6 |
| 00 18 257 | 8 | 2 |
| 00 18 258 | 4 | 2 |
| 00 18 276 | 8 | 3 |
| 00 18 282 | 2 | 3 |
| 00 18 283 | 3 | 7 |
| 00 18 305 | 3 | 7 |
| 00 18 336 | 4 | 2 |
| 00 18 344 | 1 | 5 |
| 00 18 346 | 1 | 2 |
| 00 18 358 | 5 | 9 |
| 00 18 358 | 4 | 10 |
| 00 18 358 | 4 | 11 |
| 00 18 376 | 2 | 9 |
| 00 18 376 | 2 | 7 |
| 00 18 402 | 1 | 3 |
| 00 20 116 | 1 | 9 |
| 00 20 122 | 1 | 6 |
| 00 20 122 | 1 | 9 |
| 00 24 110 | 1 | 9 |
| 00 24 121 | 4 | 2 |
| 00 28 107 | 1 | 5 |
| 00 28 111 | 1 | 2 |
| 00 28 116 | 1 | 3 |
| 00 28 116 | 1 | 3 |
| 00 28 119 | 1 | 11 |
| 00 30 100 | 1 | 6 |
| 00 30 108 | 4 | 2 |
| 00 30 125 | 1 | 2 |
| 00 30 125 | 2 | 3 |
| 00 30 125 | 1 | 11 |
| 00 30 164 | 2 | 8 |
| 00 31 210 | 2 | 4 |
| 00 31 210 | 2 | 5 |

| Bestell-Nr. Order-No. No. de Cde. Ref.-Nr. | Modell Type Modélo Modelo | Seite Page Page Pagina |
|---|---|---|
| 00 31 210 | 2 | 6 |
| 00 31 293 | 2 | 7 |
| 00 31 295 | 2 | 7 |
| 00 31 497 | 1 | 6 |
| 00 31 518 | 2 | 12 |
| 00 31 537 | 2 | 5 |
| 00 31 540 | 4 | 4 |
| 00 31 540 | 2 | 5 |
| 00 31 540 | 4 | 6 |
| 00 31 552 | 2 | 5 |
| 00 31 617 | 1 | 3 |
| 00 31 618 | 2 | 5 |
| 00 33 245 25 | 1 | 3 |
| 00 33 392 | 1 | 3 |
| 00 33 398 | 2 | 3 |
| 00 34 177 | 1 | 7 |
| 00 40 196 | 2 | 5 |
| 00 40 197 | 2 | 9 |
| 00 40 197 | 1 | 10 |
| 00 44 286 | 2 | 9 |
| 00 44 286 | 2 | 10 |
| 00 53 213 | 4 | 5 |
| 00 55 102 | 1 | 3 |
| 00 55 104 | 2 | 9 |
| 00 55 104 | 2 | 10 |
| 00 55 134 | 2 | 5 |
| 00 55 244 | 2 | 3 |
| 00 57 206 | 1 | 3 |
| 00 57 220 | 1 | 3 |
| 00 57 221 | 1 | 3 |
| 00 61 336 | 2 | 5 |
| 00 64 427 | 1 | 10 |
| 00 69 218 | 1 | 7 |
| 00 71 213 | 1 | 2 |
| 00 71 227 | 1 | 3 |
| 00 71 235 | 1 | 3 |
| 00 72 102 | 1 | 5 |
| 00 72 111 | 1 | 9 |
| 00 72 111 | 2 | 11 |
| 00 72 143 | 1 | 5 |
| 00 72 145 | 1 | 3 |
| 00 72 155 | 2 | 4 |
| 00 72 155 | 2 | 5 |
| 00 72 155 | 2 | 6 |
| 00 72 158 | 1 | 7 |
| 00 72 176 | 1 | 3 |
| 00 73 299 | 1 | 2 |
| 00 75 123 | 2 | 7 |
| 00 84 572 | 1 | 2 |
| 00 94 293 | 4 | 8 |
| 20 00 401 | 1 | 7 |
| 20 00 425 | 1 | 7 |
| 20 00 497 | 1 | 7 |
| 20 43 411 | 1 | 2 |

| Bestell-Nr. Order-No. No. de Cde. Ref.-Nr. | Modell Type Modélo Modelo | Seite Page Page Pagina |
|---|---|---|
| 30 00 227 | 1 | 5 |
| 38 00 351 | 1 | 9 |
| 38 00 353 | 1 | 9 |
| 38 00 355 | 1 | 9 |
| 38 00 358 | 1 | 9 |
| 38 00 360 | 1 | 11 |
| 38 00 361 | 1 | 10 |
| 50 11 714 | 1 | 3 |
| 50 11 715 | 1 | 3 |
| 50 16 100 | 1 | 10 |
| 50 31 223 | 1 | 7 |
| 50 31 980 | 1 | 9 |
| 50 35 111 | 1 | 9 |
| 50 35 112 | 1 | 10 |
| 50 35 965 | 1 | 8 |
| 50 36 362 | 1 | 3 |
| 50 36 403 | 1 | 2 |
| 50 36 406 | 1 | 9 |
| 50 38 437 | 1 | 5 |
| 50 38 438 | 1 | 5 |
| 50 42 818 | 2 | 2 |
| 50 42 824 | 2 | 4 |
| 50 42 824 | 4 | 5 |
| 50 42 824 | 2 | 6 |
| 50 42 828 | 1 | 7 |
| 50 42 830 | 1 | 6 |
| 50 42 860 | 1 | 3 |
| 50 43 356 | 1 | 6 |
| 50 43 961 | 1 | 7 |
| 50 43 995 | 1 | 7 |
| 50 45 702 | 2 | 5 |
| 50 48 372 | 1 | 3 |
| 50 73 577 | 1 | 7 |
| 50 73 618 | 1 | 2 |
| 50 73 631 | 2 | 5 |
| 50 73 645 | 1 | 2 |
| 50 73 670 | 1 | 2 |
| 50 73 670 27 | 1 | 2 |
| 50 73 673 | 1 | 7 |
| 50 74 100 | 1 | 8 |
| 50 74 102 | 2 | 4 |
| 50 74 104 | 2 | 6 |
| 50 74 110 | 4 | 9 |
| 50 74 110 | 2 | 10 |
| 50 74 110 | 2 | 11 |
| 50 74 122 | 1 | 9 |
| 50 74 124 | 2 | 5 |
| 50 74 125 | 2 | 5 |
| 50 74 126 | 1 | 9 |
| 50 74 127 | 1 | 9 |
| 50 74 127 | 1 | 10 |
| 50 74 130 | 1 | 5 |
| 50 74 131 | 1 | 5 |

| Bestell-Nr. Order-No. No. de Cde. Ref.-Nr. | Modell Type Modélo Modelo | Seite Page Page Pagina |
|---|---|---|
| 50 74 157 | 2 | 5 |
| 50 74 175 | 2 | 4 |
| 50 74 175 | 4 | 6 |
| 50 74 176 | 2 | 6 |
| 50 74 176 | 2 | 4 |
| 50 74 204 | 2 | 10 |
| 50 74 246 | 2 | 8 |
| 50 74 440 | 2 | 9 |
| 50 74 529 | 1 | 12 |
| 50 74 562 | 1 | 2 |
| 50 74 860 | 2 | 8 |
| 50 74 861 | 2 | 8 |
| 50 74 910 | 1 | 7 |
| 50 74 911 | 1 | 7 |
| 50 74 950 | 1 | 9 |
| 50 74 956 | 1 | 9 |
| 50 74 956 | 1 | 11 |
| 50 74 958 | 2 | 9 |
| 50 74 958 | 2 | 10 |
| 50 74 959 | 2 | 9 |
| 50 74 959 | 2 | 10 |
| 50 74 976 | 2 | 8 |
| 53 00 585 | 1 | 3 |
| 53 00 613 | 2 | 6 |
| 53 00 624 | 1 | 6 |
| 53 00 625 | 1 | 4 |
| 53 00 632 | 2 | 4 |
| 53 00 634 | 1 | 2 |
| 53 00 639 | 2 | 8 |
| 53 00 640 | 1 | 2 |
| 53 00 668 | 1 | 5 |
| 53 00 669 | 1 | 5 |
| 53 00 674 | 2 | 5 |
| 53 00 683 | 1 | 5 |
| 53 00 531 | 1 | 7 |
| 53 00 678 | 1 | 3 |
| 58 00 276 | 1 | 6 |
| 58 00 452 | 1 | 3 |
| 58 00 454 | 1 | 3 |
| 58 00 455 | 1 | 6 |
| 58 00 458 | 1 | 3 |
| 58 00 478 | 1 | 9 |
| 58 00 479 | 1 | 11 |
| 58 00 487 | 1 | 10 |
| 58 00 488 | 1 | 11 |
| 58 00 491 | 2 | 9 |
| 58 00 491 | 2 | 10 |
| 59 00 772 | 1 | 2 |
| 59 00 774 | 1 | 2 |
| 6 91 959 | 1 | 12 |
| 79 00 296 | 1 | 12 |
| 79 00 297 | 1 | 2 |

(D)

**Allgemeine Richtlinien für die Bestellung von Original SOLO Ersatzteilen:**

Voraussetzung für eine reibungslose Erledigung sind folgende Angaben:

1. Ersatzteil-Bestellnummer
2. Gewünschte Anzahl
3. Typenbezeichnung des Geräts

Diese Ersatzteilliste ist für die Lieferung und Ausstattung von SOLO Erzeugnissen unverbindlich.
Im Interesse der technischen Weiterentwicklung bleiben Konstruktionsänderungen vorbehalten.

(GB)

**General Directions for Ordering Original SOLO Spare Parts:**

For correct and diligent processing of your order, please give the following information:

1. Spare Part number
2. Quantity
3. Model and serial number
4. Shipping instructions

Delivery is made in accordance with our general sales and delivery conditions. This spare parts list is non-committal for us with regard to delivery and layout of SOLO products. In favour of technical improvements, design modifications are subject to change without notice.

(F)

**Directives générales pour les commandes de pièces de rechange d'origine SOLO:**

Il est indispensable de préciser dans toutes les commandes de pièces:

1. le numéro de référence de la pièce
2. la quantité
3. le type de la machine
4. le mode d'expédition

Les livraisons sont effectuées dans le cadre de nos conditions générales de vente.
Toutes modifications réservées.

(E)

**Directivas Generales de pedido de la firma SOLO:**

Por adelantado de un arreglo sin dificultades necesitamos siguientes indicaciónes:

1. Número de repuesto
2. Numero de cantidad
3. Modelo y número de serial
4. Instrucción de Envió

Esta lista de repuestos no es obligatoria para los envios y/o forma de equipo de los productos SOLO.
En el interés del constante desarollo debemos reservarmos el derecho de cambios.